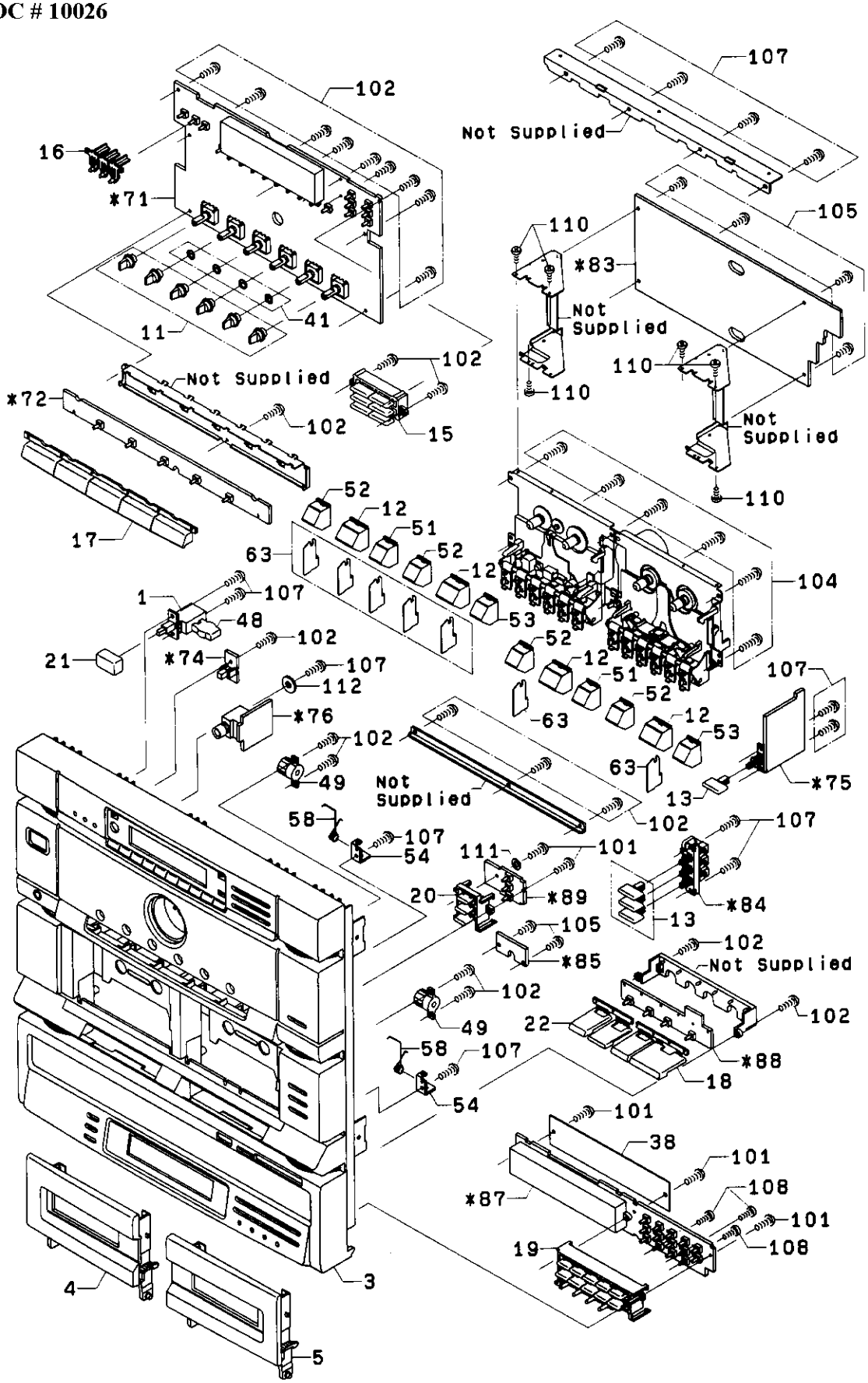SYSTEM 720 INTEGRATED STEREO
COMPONENT SYSTEM (13-1267)
CABINET # 4
FAXBACK DOC # 10026