3200 (250-1633) Layout Faxback Doc. # 2762

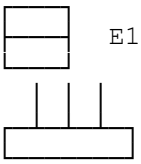

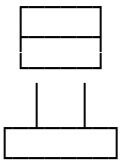

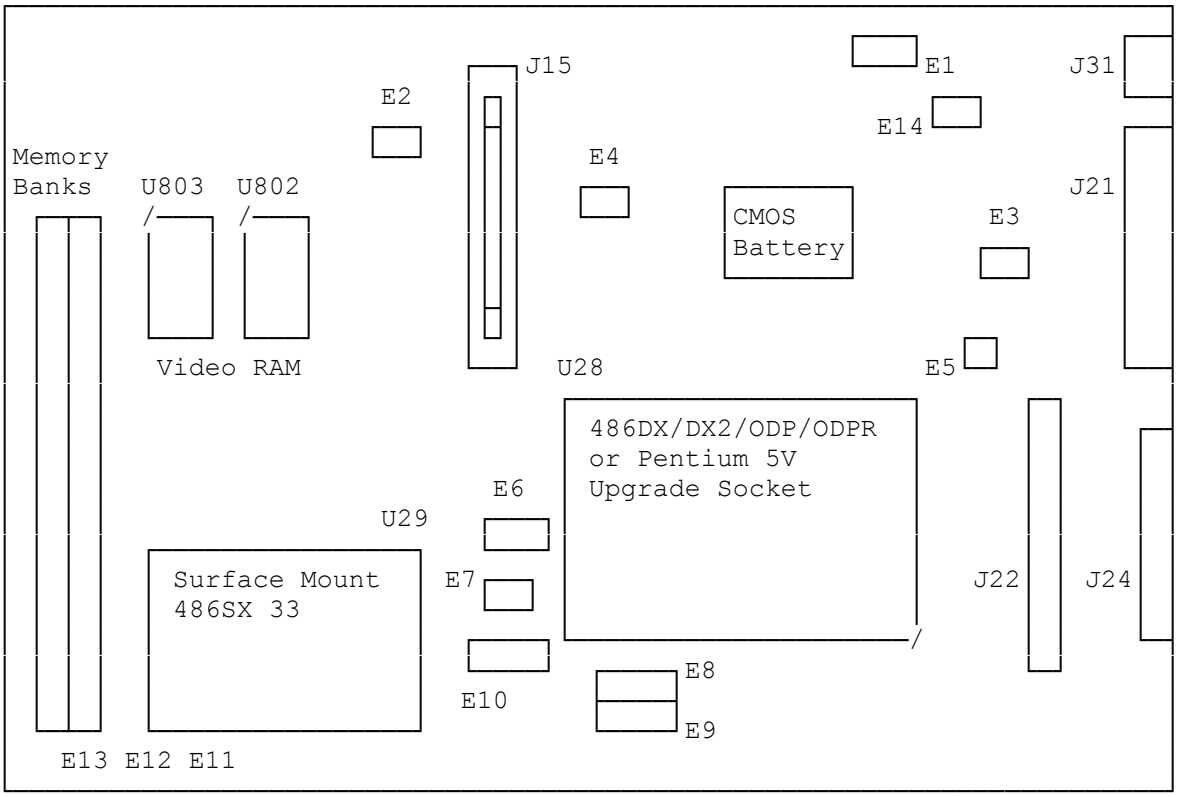

(SMC/jjs-11/10/94)