TANDY 1000 TL/3 (250-1603) Layout Faxback Doc. # 1248
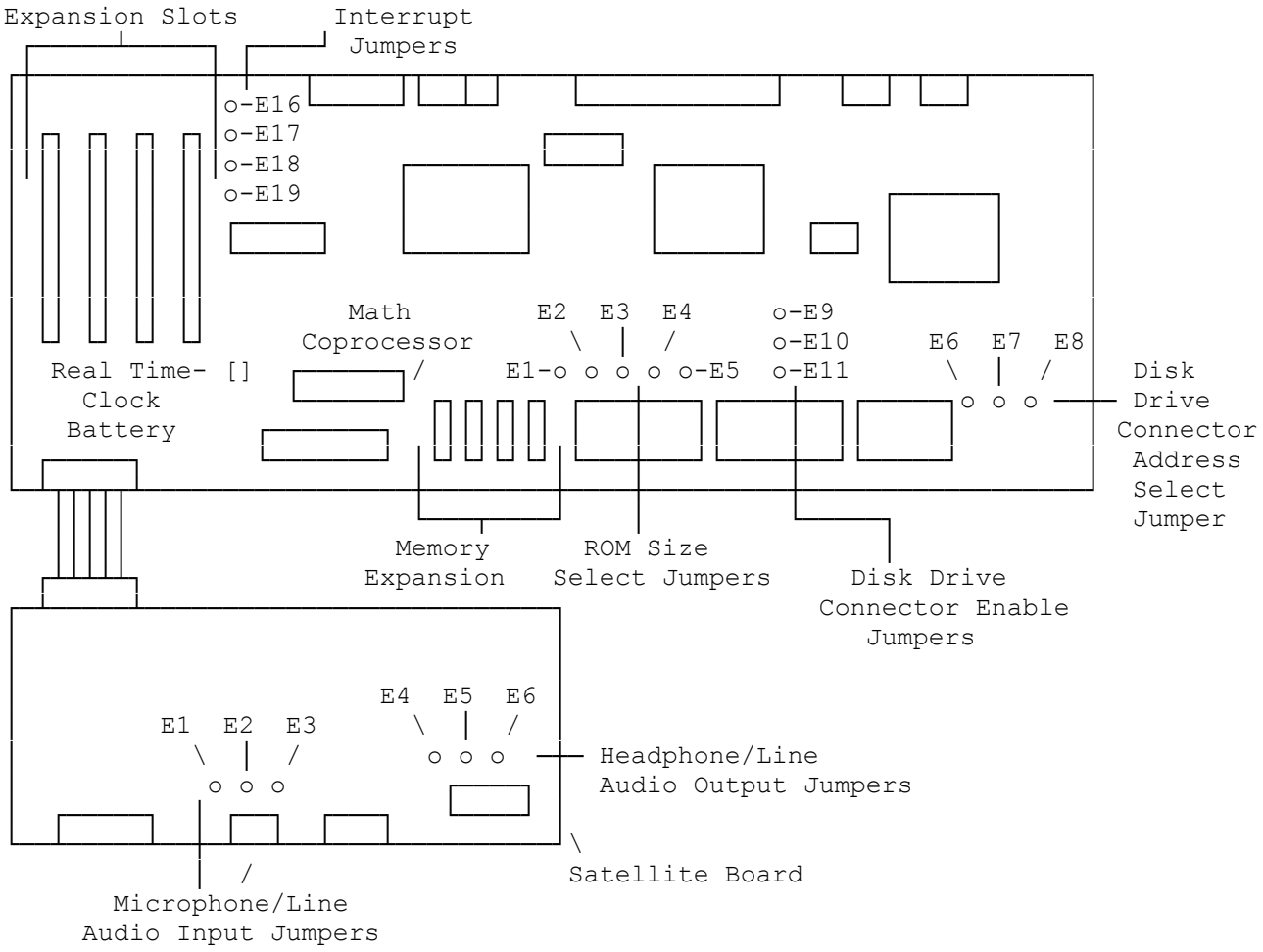
Refer to Faxback Doc. # 1242 for setting this board.